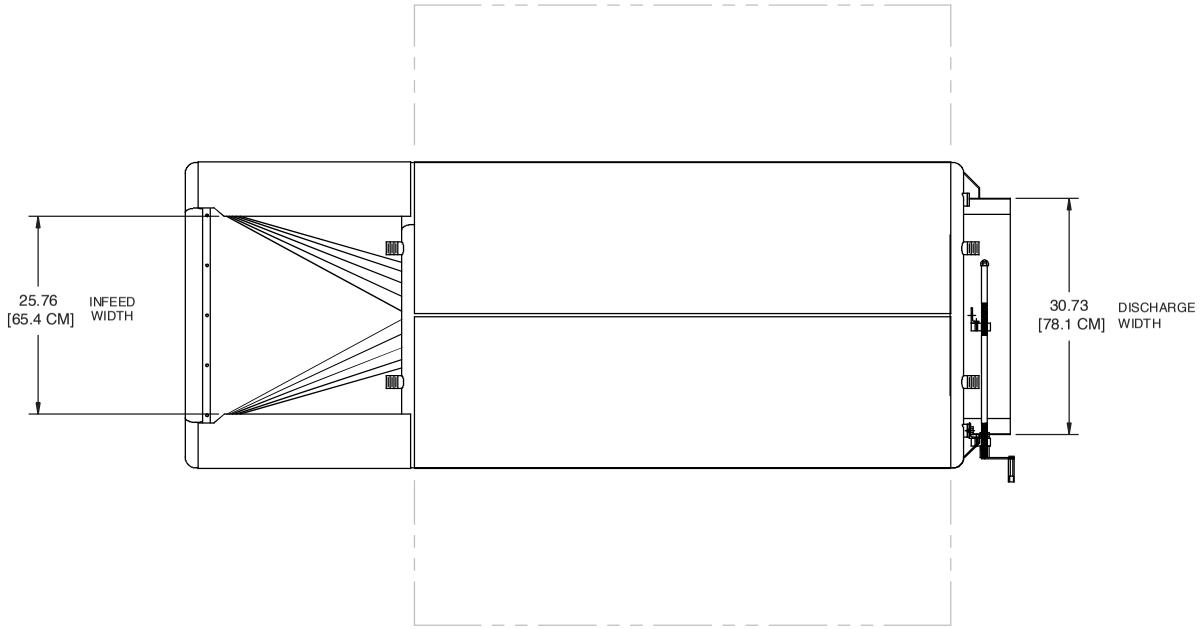
25.76
[65.4 CM]
INFEED
WIDTH
30.73
[78.1 CM]
DISCHARGE
WIDTH

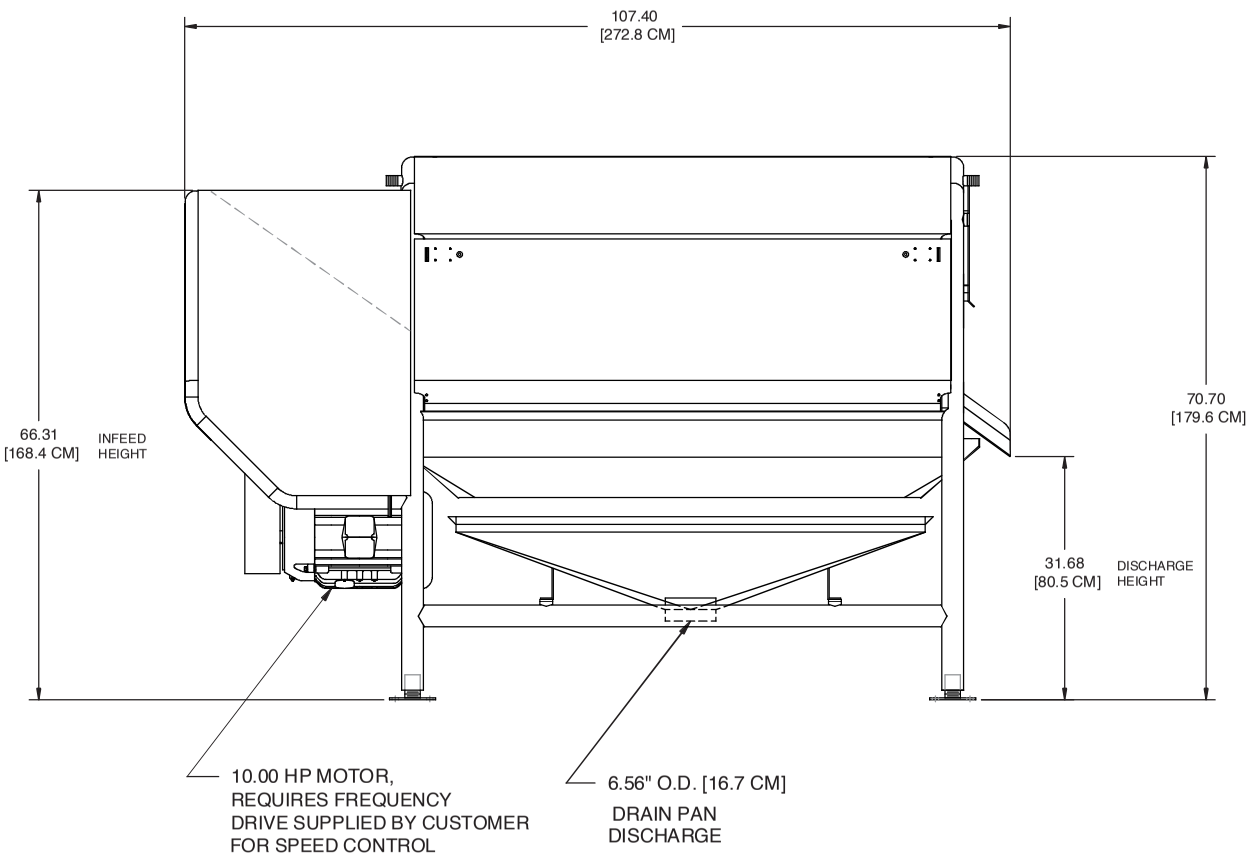
107.40
[272.8 CM]
66.31
[168.4 CM]
INFEED
HEIGHT
70.70
[179.6 CM]
31.68
[80.5 CM]
DISCHARGE
HEIGHT
10.00 HP MOTOR,
REQUIRES FREQUENCY
DRIVE SUPPLIED BY CUSTOMER
FOR SPEED CONTROL
6.56" O.D. [16.7 CM]
DRAIN PAN
DISCHARGE

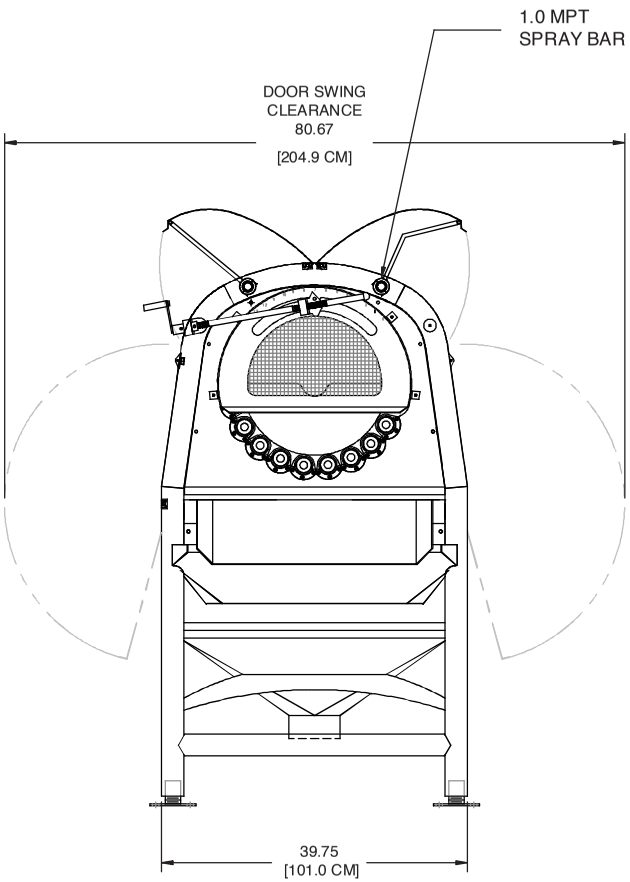
1.0 MPT
SPRAY BAR
DOOR SWING
CLEARANCE
80.67
[204.9 CM]
39.75
[101.0 CM]