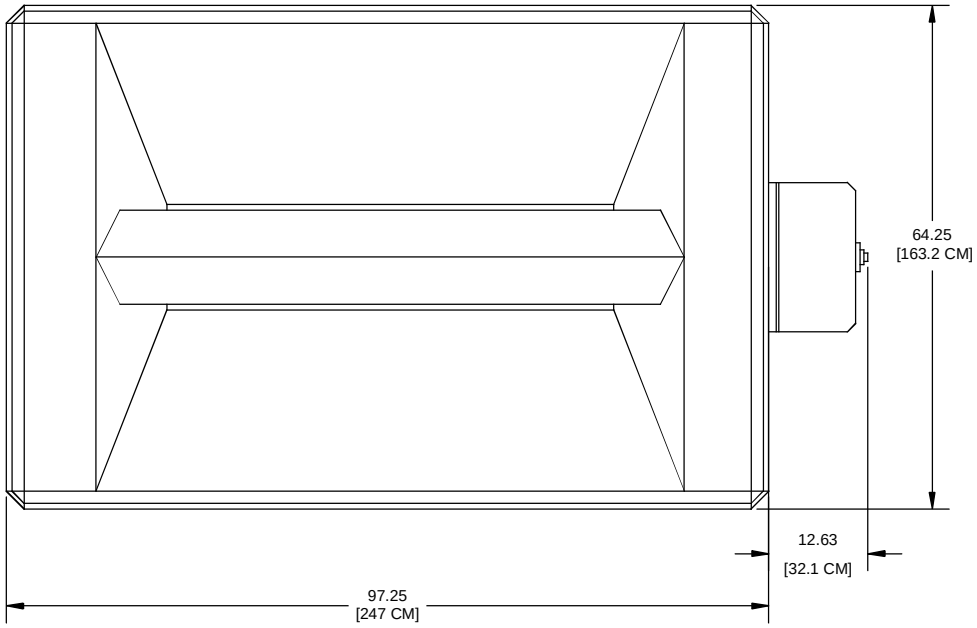
64.25
[163.2 CM]
12.63
[32.1 CM]
97.25
[247 CM]

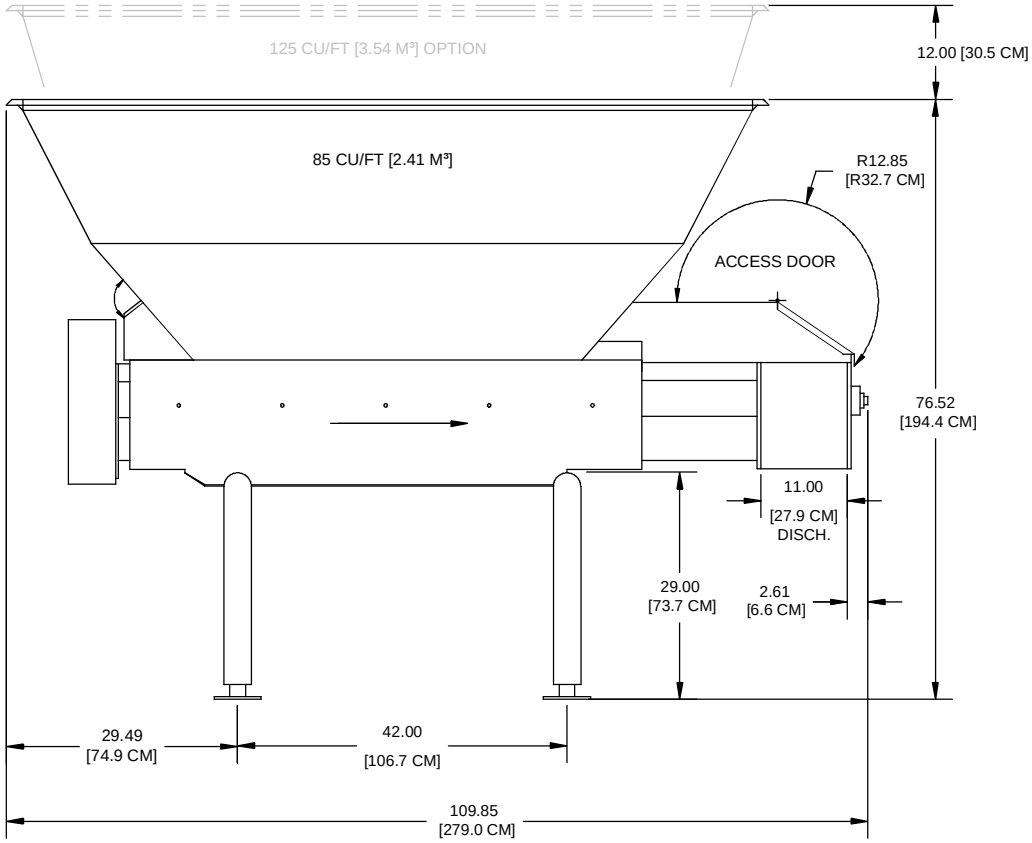
125 CU/FT [3.54 M³] OPTION
12.00 [30.5 CM]
85 CU/FT [2.41 M³]
R12.85
[R32.7 CM]
ACCESS DOOR
76.52
[194.4 CM]
11.00
[27.9 CM]
DISCH.
29.00
[73.7 CM]
2.61
[6.6 CM]
29.49
[74.9 CM]
42.00
[106.7 CM]
109.85
[279.0 CM]

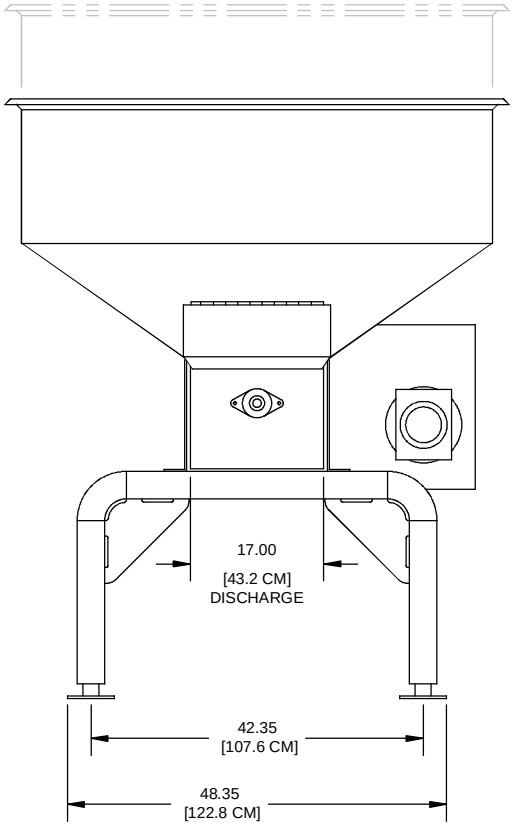
17.00
[43.2 CM]
DISCHARGE
42.35
[107.6 CM]
48.35
[122.8 CM]