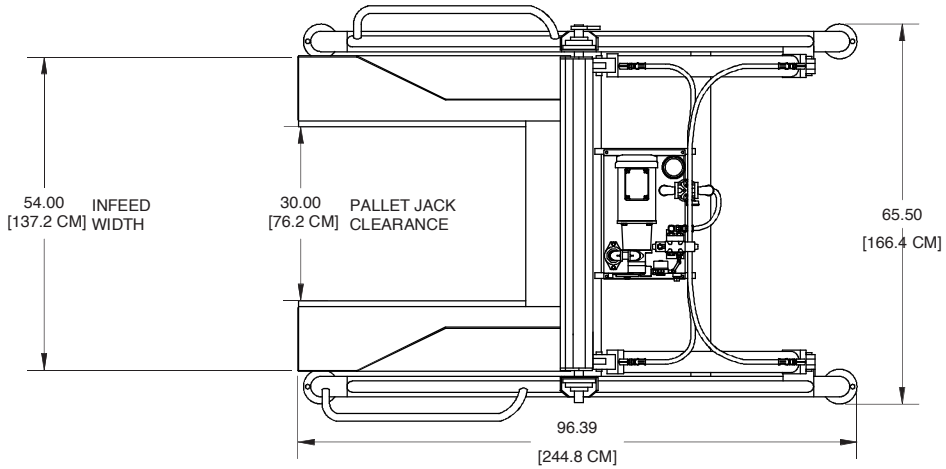
54.00
[137.2 CM]
INFEED
WIDTH
30.00
[76.2 CM]
PALLET JACK
CLEARANCE
65.50
[166.4 CM]
96.39
[244.8 CM]

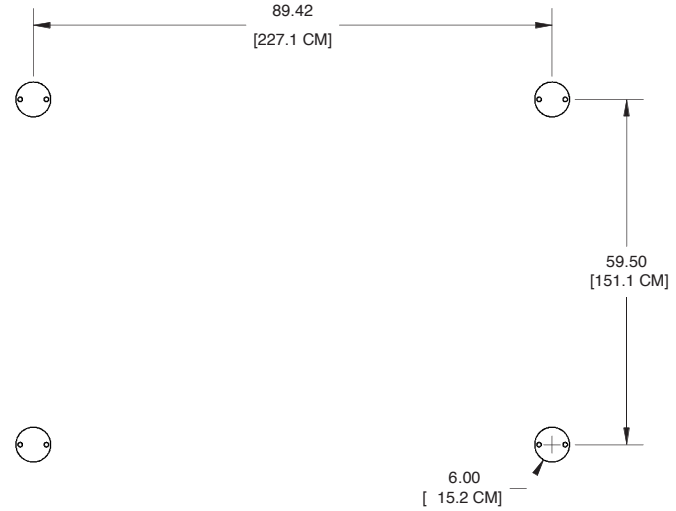
89.42
[227.1 CM]
59.50
[151.1 CM]
6.00
[15.2 CM]

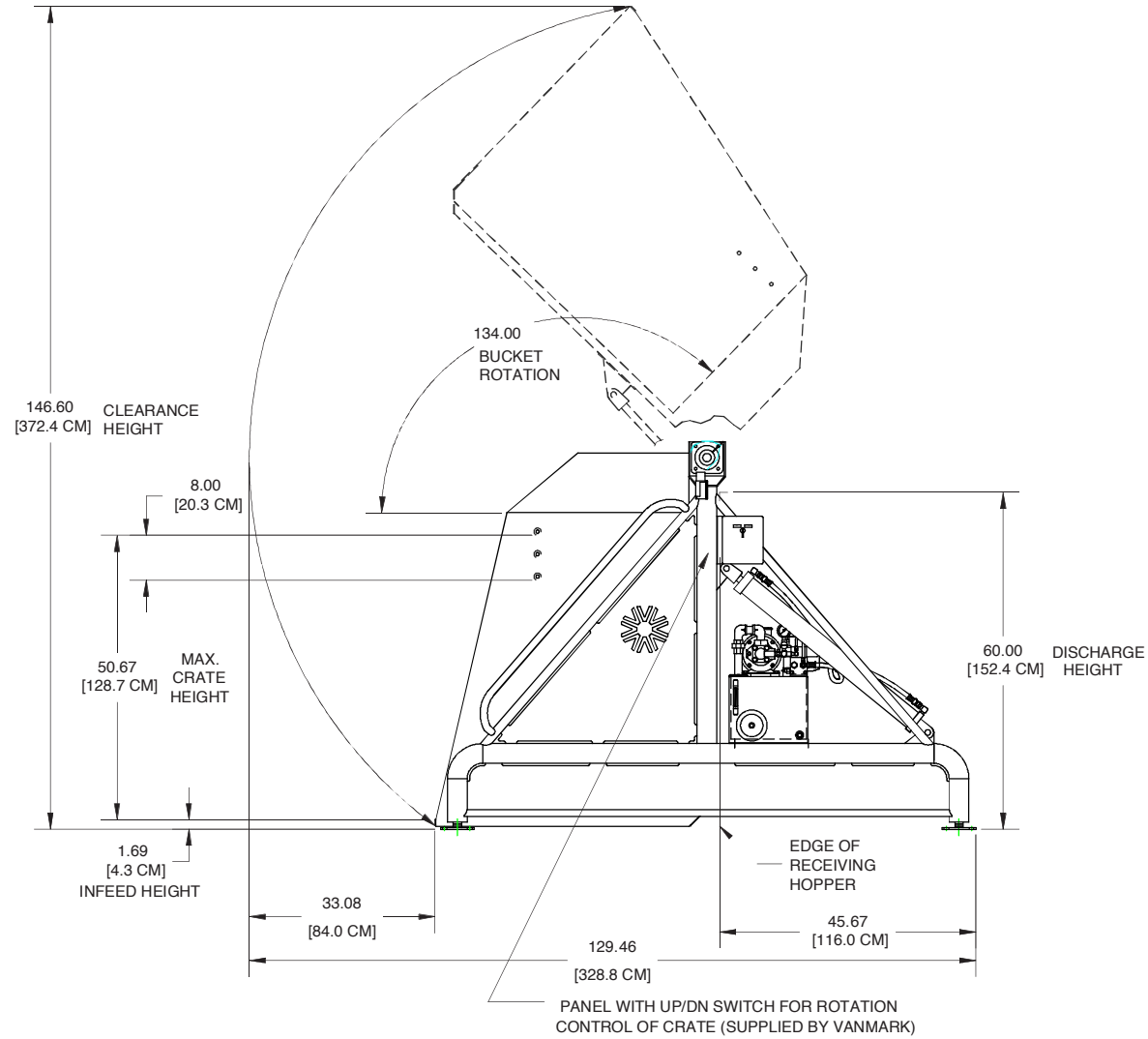
134.00
BUCKET
ROTATION
146.60
[372.4 CM]
CLEARANCE
HEIGHT
8.00
[20.3 CM]
50.67
[128.7 CM]
MAX.
CRATE
HEIGHT
60.00
[152.4 CM]
DISCHARGE
HEIGHT
1.69
[4.3 CM]
INFEED HEIGHT
EDGE OF
RECEIVING
HOPPER
33.08
[84.0 CM]
45.67
[116.0 CM]
129.46
[328.8 CM]
PANEL WITH UP/DN SWITCH FOR ROTATION
CONTROL OF CRATE (SUPPLIED BY VANMARK)

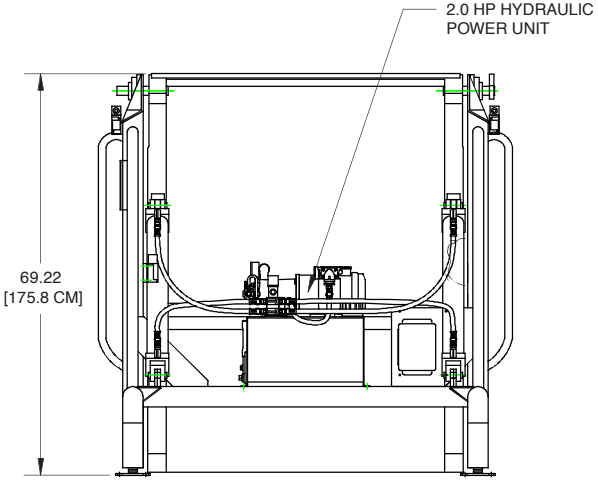
2.0 HP HYDRAULIC
POWER UNIT
69.22
[175.8 CM]