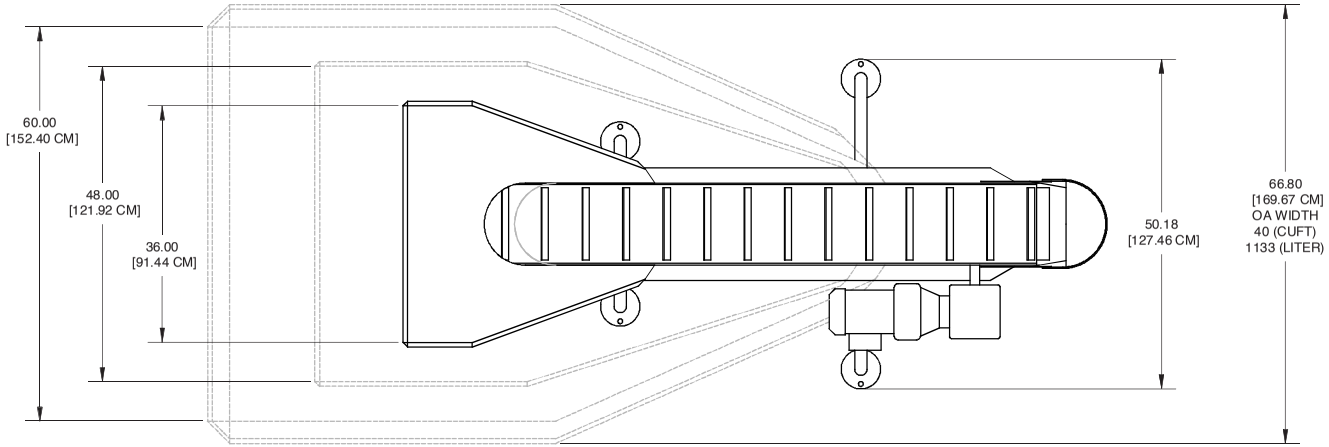
60.00
[152.40 CM]
48.00
[121.92 CM]
36.00
[91.44 CM]
50.18
[127.46 CM]
66.80
[169.67 CM]
OA WIDTH
40 (CUFT)
1133 (LITER)

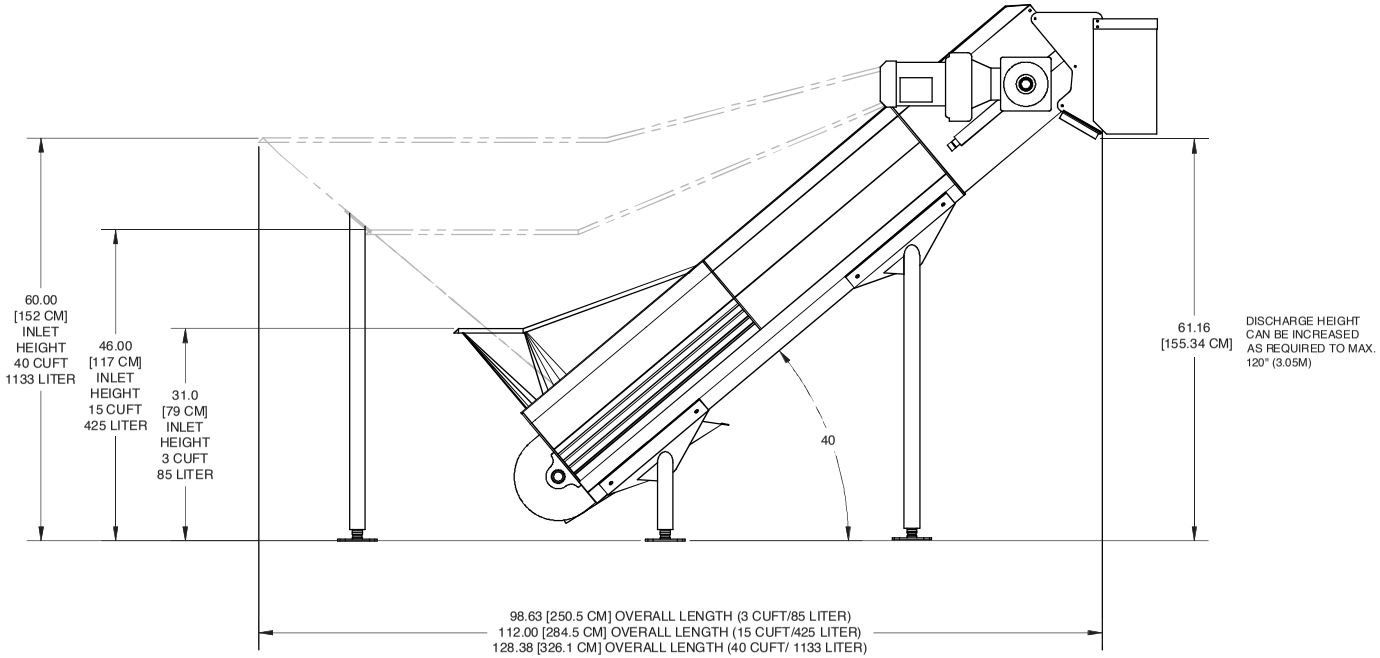
60.00
[152 CM]
INLET
HEIGHT
40 CUFT
1133 LITER
46.00
[117 CM]
INLET
HEIGHT
15 CUFT
425 LITER
31.0
[79 CM]
INLET
HEIGHT
3 CUFT
85 LITER
40
61.16
[155.34 CM]
DISCHARGE HEIGHT
CAN BE INCREASED
AS REQUIRED TO MAX.
120" (3.05M)
98.63 [250.5 CM] OVERALL LENGTH (3 CUFT/85 LITER)
112.00 [284.5 CM] OVERALL LENGTH (15 CUFT/425 LITER)
128.38 [326.1 CM] OVERALL LENGTH (40 CUFT/ 1133 LITER)

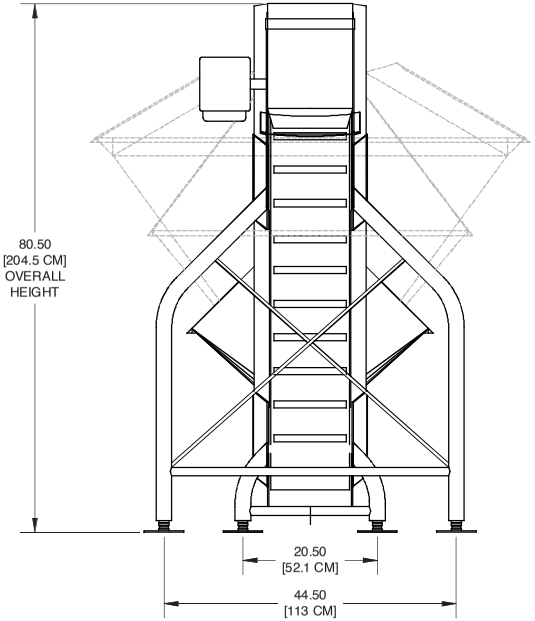
80.50
[204.5 CM]
OVERALL
HEIGHT
20.50
[52.1 CM]
44.50
[113 CM]